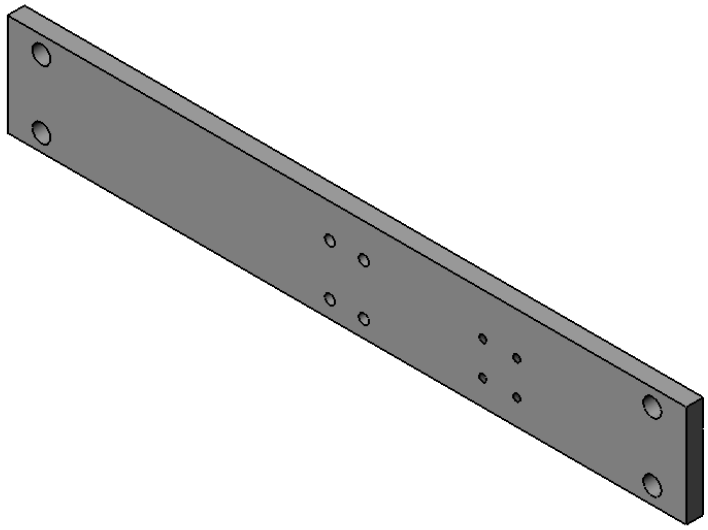

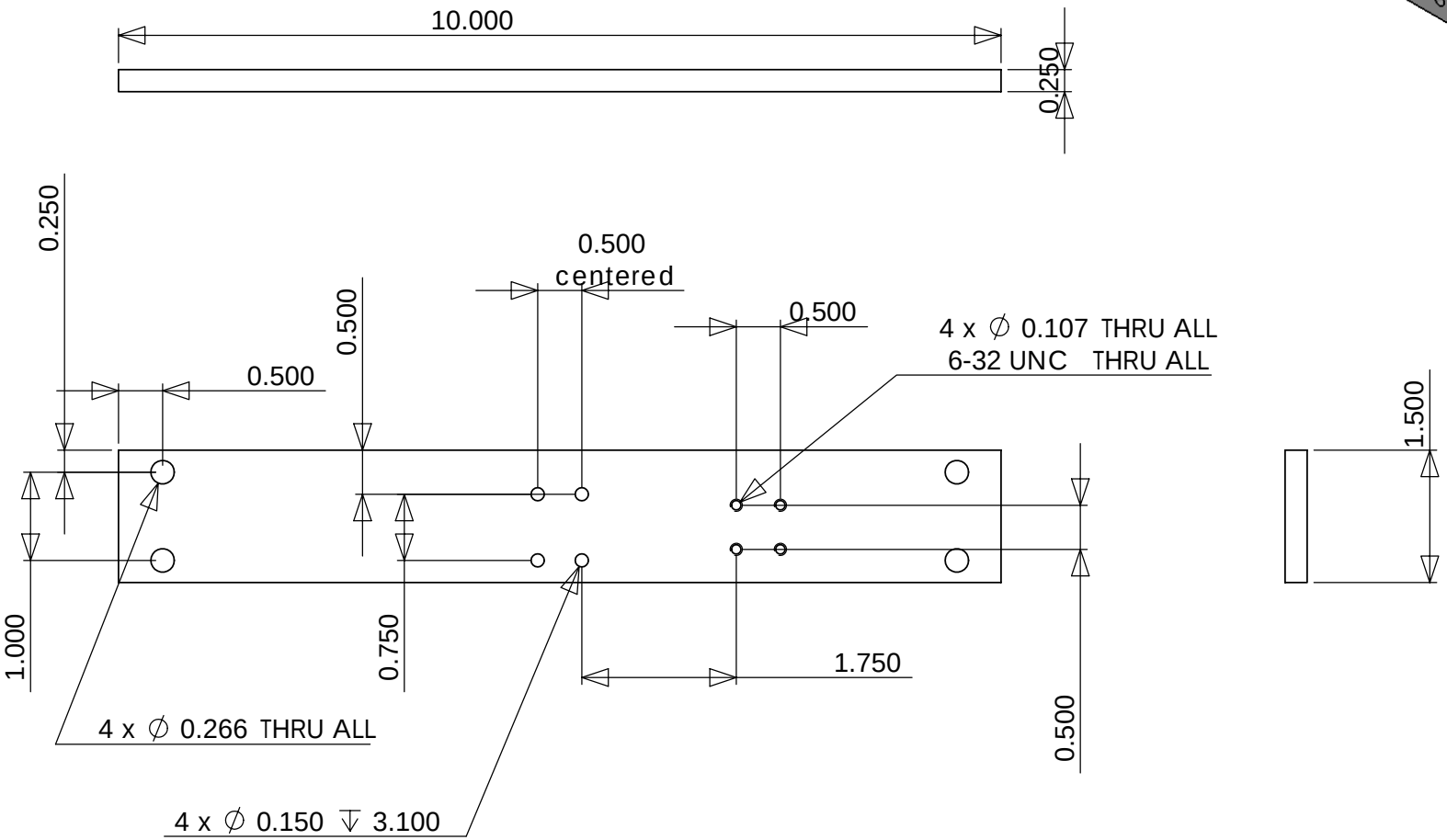


3/17/2008

| | | |
|---|---|---|
| MIT CSAIL | 77 MASSACHUSETTS AVENUE<br>RM 32-380<br>CAMBRIDGE, MA 02139 | |
| Drawn by: Dan @ 617-504-9619 | | |
| n03-neck-baseplate-to-body | | |
| Quantity: 1 piece | | Scale1:2 |
| Material: | Finish: | 1/1 |