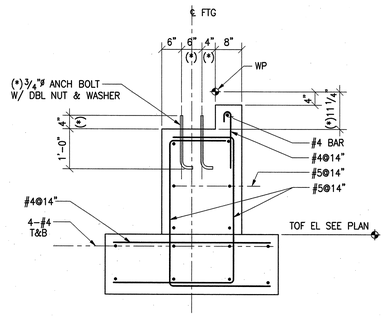

NOTES: BRIDGE BY OTHERS

(*) TO BE VERIFIED WITH BRIDGE MANUFACTURER

FOOTING SECTION (3)

3/4"=1'-0"

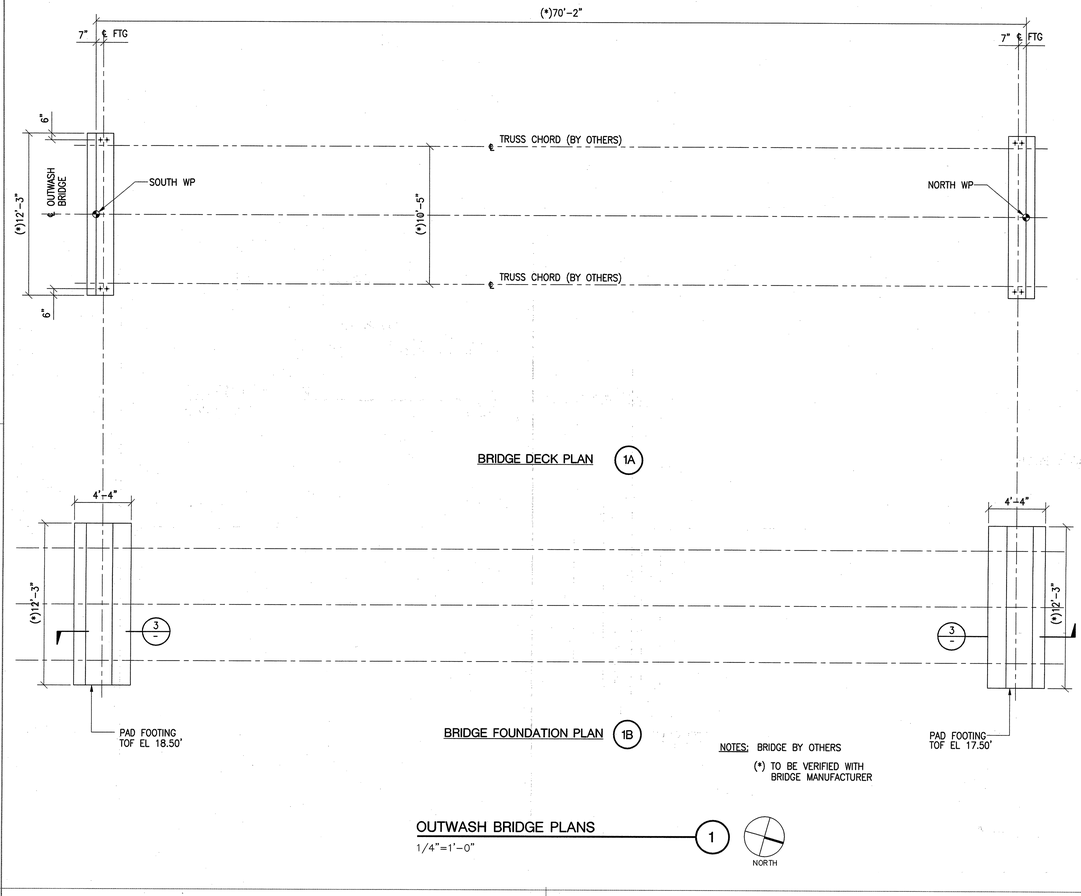

BRIDGE DECK PLAN (1A)

BRIDGE FOUNDATION PLAN (1B)

NOTES: BRIDGE BY OTHERS

(*) TO BE VERIFIED WITH BRIDGE MANUFACTURER

OUTWASH BRIDGE PLANS (1)

1/4"=1'-0"

NORTH

FRANK O. GEHRY & ASSOCIATES, INC.
1520-B CLOVERFIELD BOULEVARD, SANTA MONICA, CALIFORNIA 90404 TEL (310)828-6088 FAX (310)828-2098

CANNON DESIGN
1000 MAIN STREET, BOSTON MA 02108
TEL (617) 742-2341 FAX (617) 723-9932

RG VANDERWEIL ENGINEERS, INC.
1000 MAIN STREET, BOSTON MA 02108
TEL (617) 423-7755 FAX (617) 423-7594
MEP/Fire Protection

JOHN A. MARTIN & ASSOCIATES, INC.
1212 SOUTH FLOWER ST., LOS ANGELES CA 90015
TEL (213) 483-3456 FAX (213) 483-3984
Structural Engineer

THE RAY AND MARIA STATA CENTER

MASSACHUSETTS INSTITUTE OF TECHNOLOGY
32 VASSAR ST. CAMBRIDGE MASSACHUSETTS 02139

NOTES:

NO	DATE	ISSUE
9	06/17/02	NE SECTOR LANDSCAPE CONSTRUCTION SET

TITLE

STEEL SECTIONS AND DETAILS NE SECTOR LANDSCAPE

PROJECT NUMBER
9801
SCALE
AS NOTED
DRAWN BY

DATE
JUNE 17, 2002

SHEET NUMBER

S4-19

© FRANK O. GEHRY & ASSOCIATES, INC.

RECEIVED
JUN 18 2002
BY BSCC

ISSUE #9 NE SECTOR LANDSCAPE CONSTRUCTION SET
JUNE 17, 2002