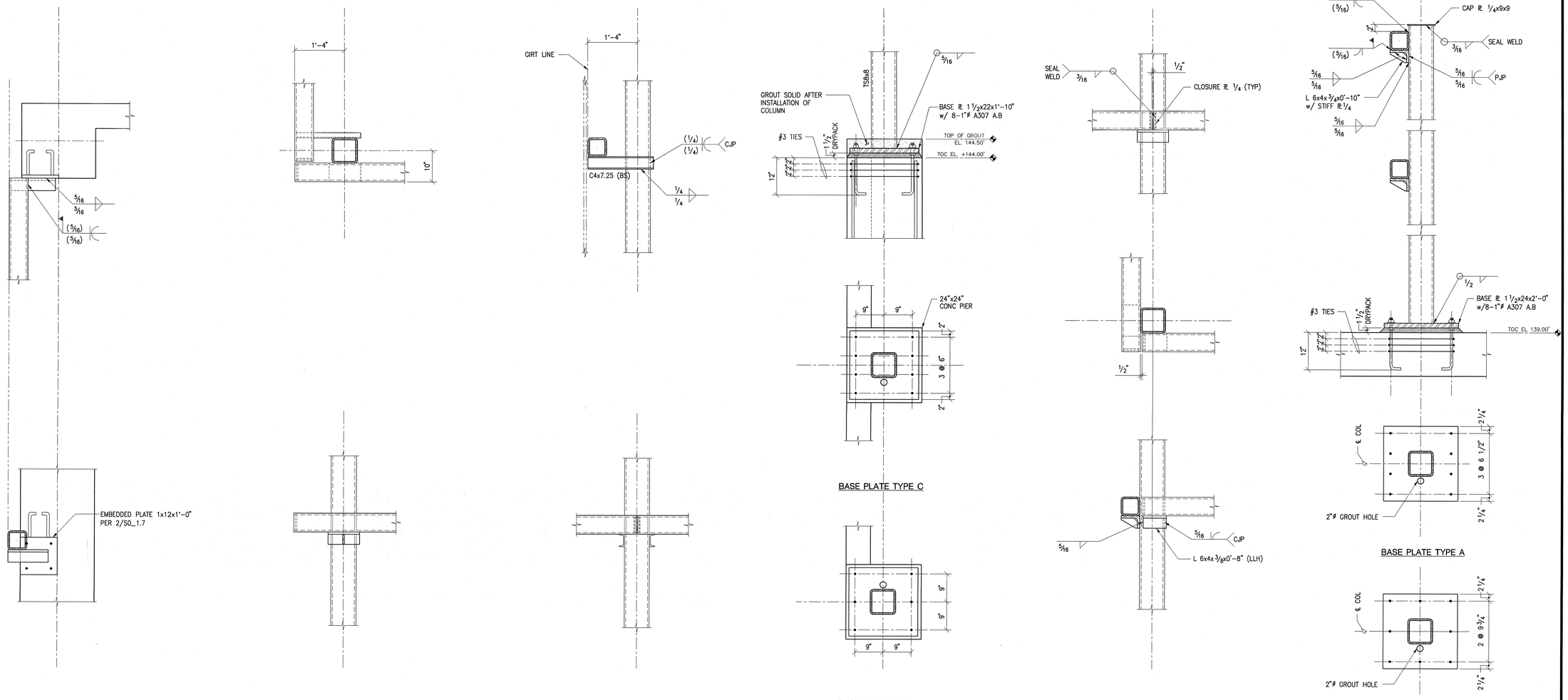

1 BRICK FACED PRECAST CONCRETE SUPPORT FRAMING
1"=1'-0"

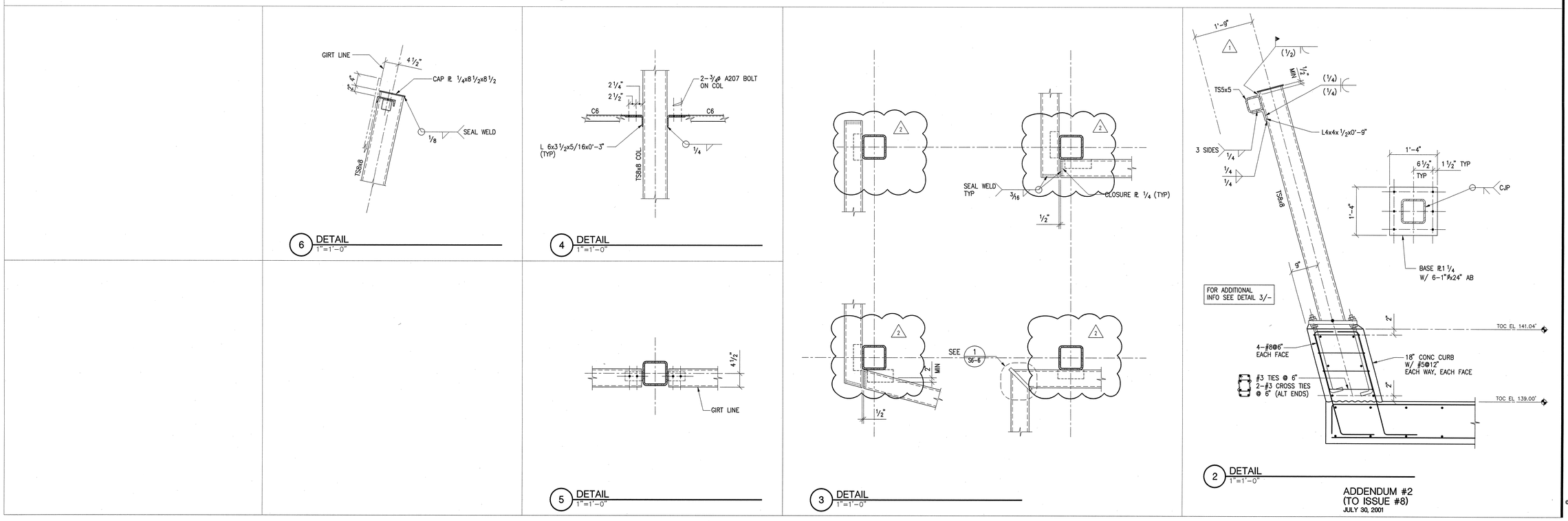

6 DETAIL
1"=1'-0"

4 DETAIL
1"=1'-0"

5 DETAIL
1"=1'-0"

3 DETAIL
1"=1'-0"

2 DETAIL
1"=1'-0"

ADDENDUM #2
(TO ISSUE #8)
JULY 30, 2001

FRANK O. GEHRY & ASSOCIATES, INC.
5600 W. SLAUSON BOULEVARD, LOS ANGELES, CALIFORNIA 90045 TEL (310)574-7700 FAX (310)574-7659

CANNON DESIGN
CAMBRIDGE DESIGN 1 BROADWAY, CAMBRIDGE MA 02142
TEL (617)494-1200 FAX (617)494-1201
Associate Architect

JOHN A. MARTIN & ASSOCIATES, INC.
700 SOUTH FLOWER ST. STE 1000, LOS ANGELES CA 90015
TEL (213)483-9700 FAX (213)483-9425
Structural Engineer

RG VANDERWEIL ENGINEERS, INC.
1010 WASHINGTON BLVD. STAMFORD, CT 06901
TEL (203)324-7775 FAX (203)327-1671
M/E/P Engineer

THE RAY AND MARIA STATA CENTER

MASSACHUSETTS INSTITUTE OF TECHNOLOGY
32 VASSAR ST. CAMBRIDGE MASSACHUSETTS 02139

NOTES:

NO	DATE	ISSUE
8	06/26/01	SHELL & CORE (ETS)-1-6 CONSTRUCTION/PERMIT SET
7	07/02/01	ADDENDUM #1 (TO ISSUE #8)
8	07/30/01	ADDENDUM #2 (TO ISSUE #8)

TITLE
STEEL SECTIONS & DETAILS, ROOF ENCLOSURES

PROJECT NUMBER
0001
SCALE
1" = 1'-0"
DRAWN BY

DATE
JULY 30, 2001

SHEET NUMBER
S6-1

© FRANK O. GEHRY & ASSOCIATES, INC.

D:\J0998-MIT\ISSUE8-2-010727\01\EL-SET-DET\S6-1.DWG
Fri Jul 27 00:38:41 2001