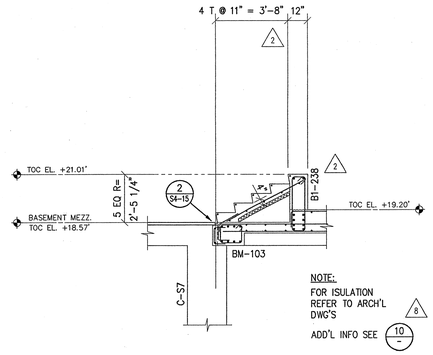

9 SECTION AT STAIR 70
3/8"=1'-0"

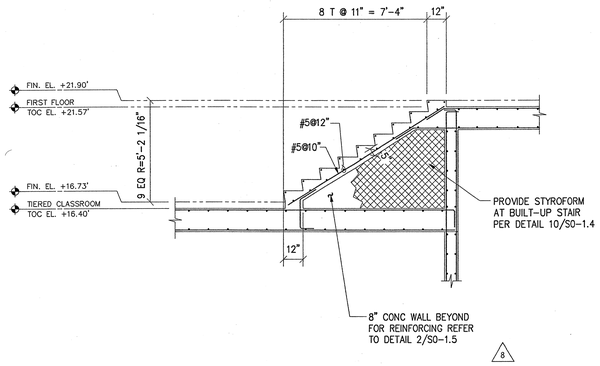

5 SECTION AT STAIRS 25 AND 26
3/8"=1'-0"

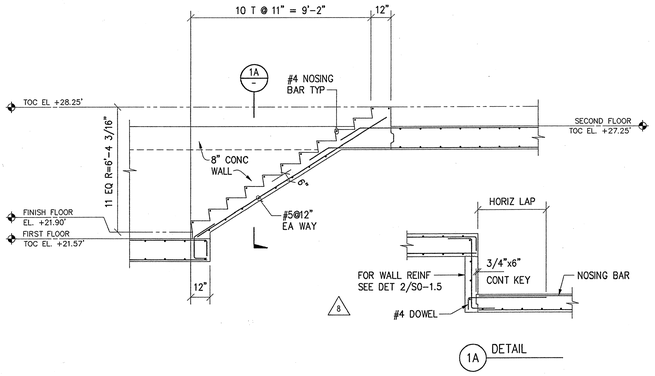

1 SECTION AT STAIR 10
3/8"=1'-0"

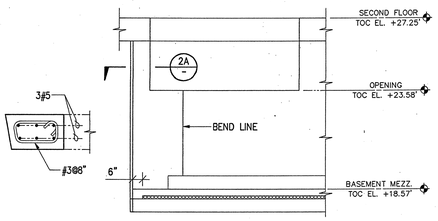

2A DETAIL
1"=1'-0"

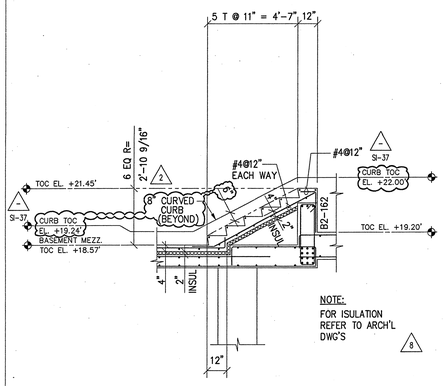

10 SECTION AT STAIR 71
3/8"=1'-0"

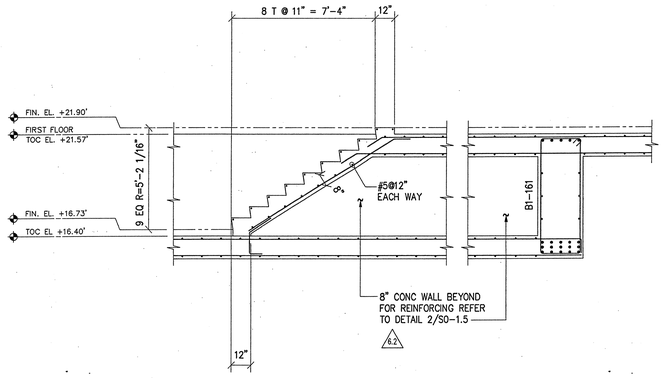

6 SECTION AT STAIR 27
3/8"=1'-0"

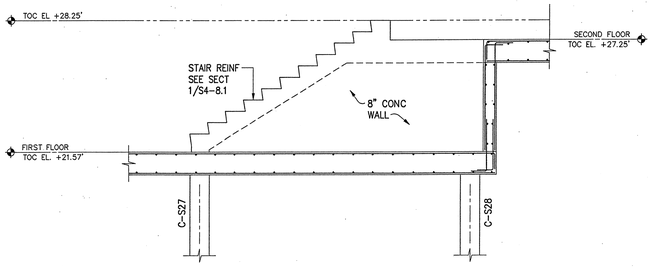

2 ELEVATION AT STAIR 10
3/8"=1'-0"

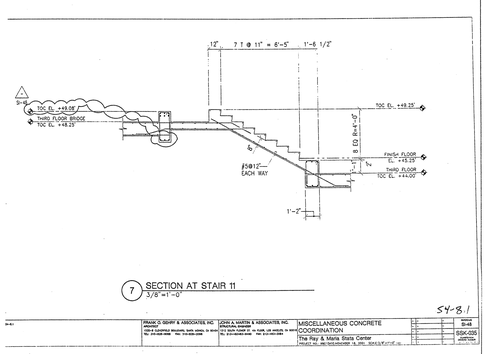

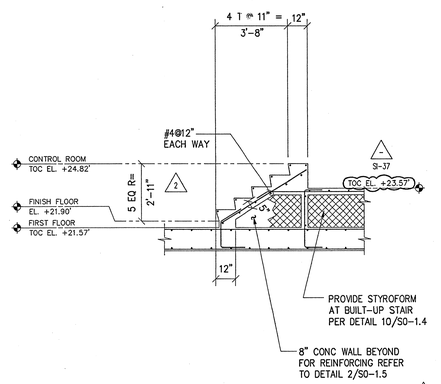

11 SECTION AT STAIR 28
3/8"=1'-0"

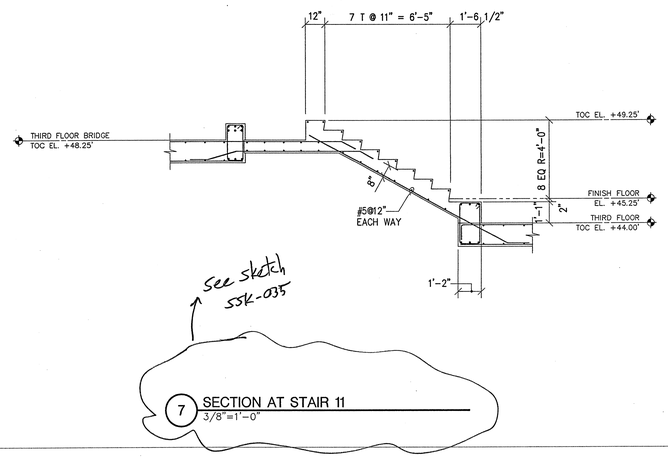

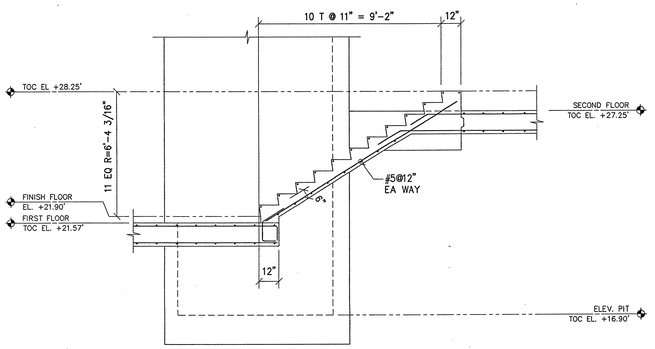

3 SECTION AT STAIR 15
3/8"=1'-0"

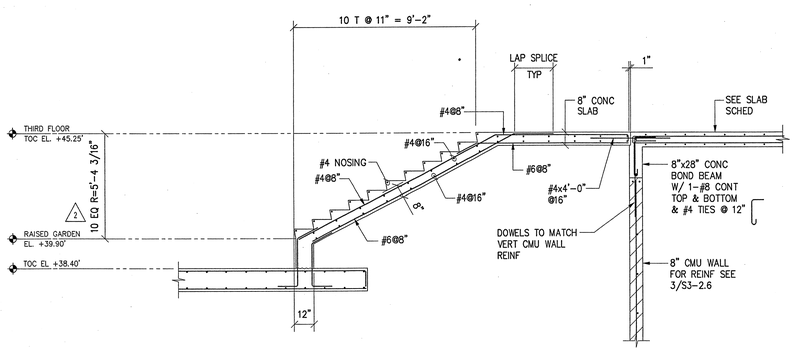

12 SECTION AT STAIR 12
3/8"=1'-0"

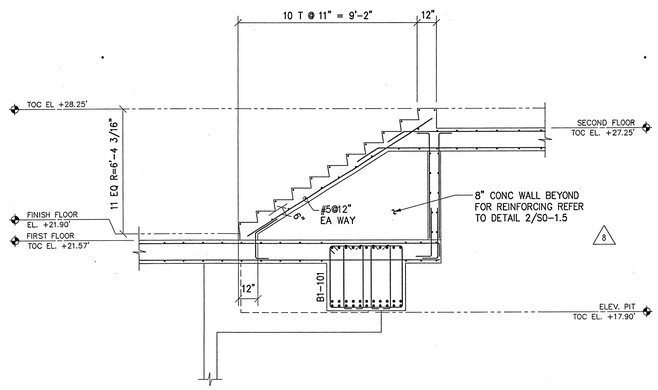

8 SECTION AT STAIR 9
3/8"=1'-0"

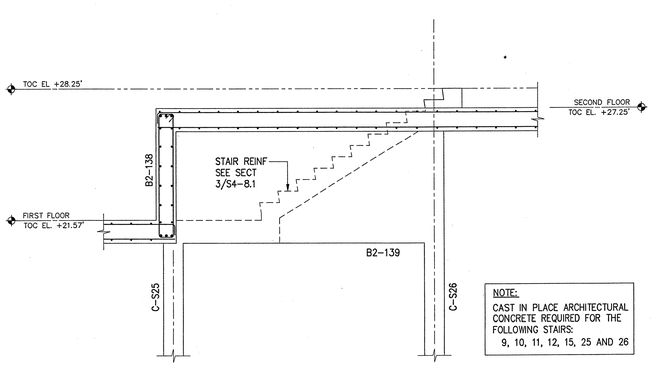

NOTE:
CAST IN PLACE ARCHITECTURAL CONCRETE REQUIRED FOR THE FOLLOWING STAIRS:
9, 10, 11, 12, 15, 25 AND 26

4 ELEVATION AT STAIR 15
3/8"=1'-0"
SUPPLEMENTAL INSTRUCTIONS #37
OCTOBER 24, 2001

FRANK O. GEHRY & ASSOCIATES, INC.
1522-B CLOVERFIELD BOULEVARD, SANTA MONICA, CALIFORNIA 90404 TEL (310)828-6083 FAX (310)828-2369

RG VANDERWEIL ENGINEERS, INC.
214 LOVEJOY STREET, PITTSBURGH, PA 15213
TEL (412)621-7550 FAX (412)621-1041
MEP Engineer

CANNON DESIGN
200 BERKELEY STREET, BOSTON, MA 02116
TEL (617)390-2200 FAX (617)262-8832
Associate Architect

JOHN A. MARTIN & ASSOCIATES, INC.
11377 W. OLYMPIC BLVD., LOS ANGELES CA 90064
TEL (310)575-4724 FAX (310)312-1544
Structural Engineer

THE RAY AND MARIA STATA CENTER

MASSACHUSETTS INSTITUTE OF TECHNOLOGY
32 VASSAR ST. CAMBRIDGE MASSACHUSETTS 02139

NOTES:

NO	DATE	ISSUE

NO	DATE	ISSUE
6	04/26/01	SKELL & CORE (P13) 90% CHP FOR CONSTRUCTION
5	04/05/01	SKELL & CORE (P13) CONSTRUCTION SET
4	04/02/01	SKELL & CORE (P13-1) CONSTRUCTION/PERMIT SET
3	07/26/00	ADDENDUM #2 (TO ISSUE #6)
2	05/26/00	SUPPLEMENTAL INSTRUCTION #37-5
1	10/24/01	

TITLE
CONCRETE SECTIONS & DETAILS,
FIRST FLOOR STAI

PROJECT NUMBER
9801
SCALE
3/8"=1'-0"
DRAWN BY

DATE
OCTOBER 24, 2001

SHEET NUMBER
S4-8.1

© FRANK O. GEHRY & ASSOCIATES, INC.

FT\09990\TIT\37-OUT102401\DEL-SET-DETS\S4-8.1.DWG
Wed Oct 24 19:37:32 2001