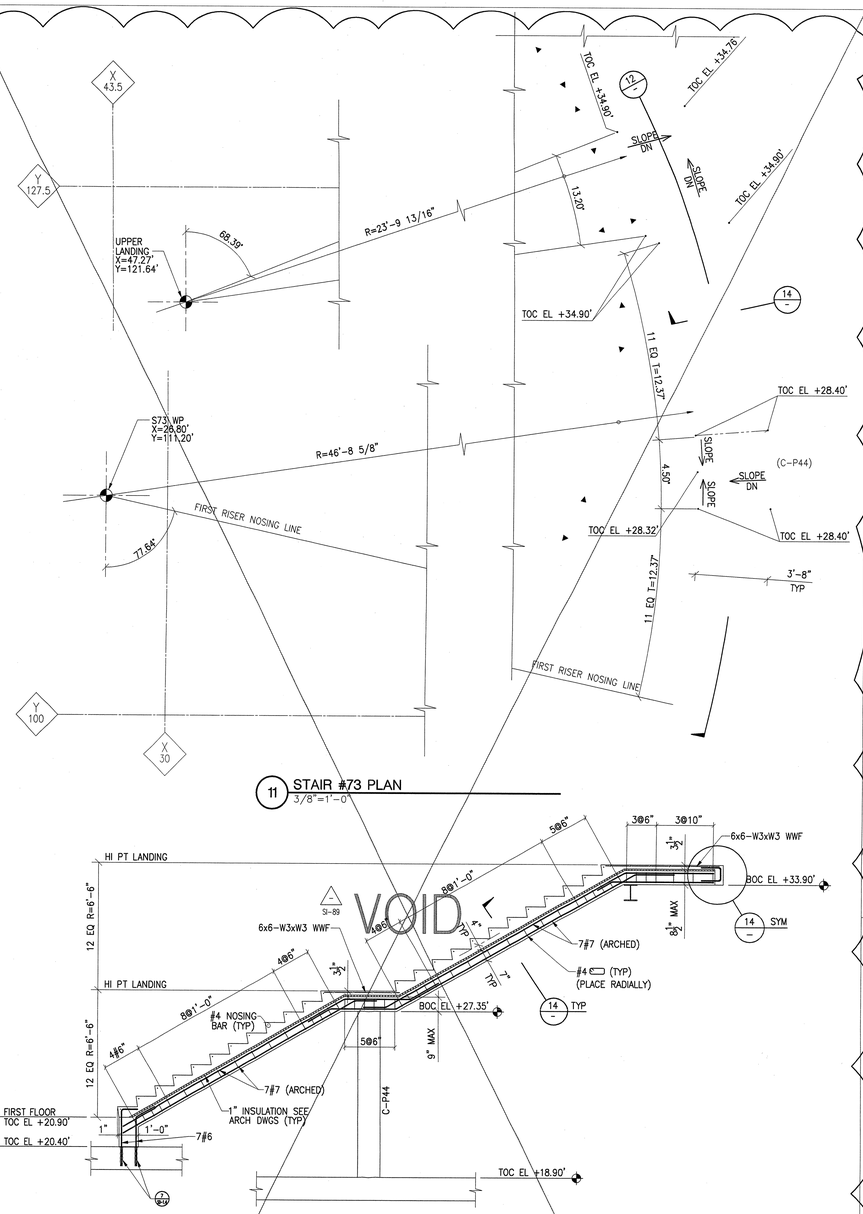

11 STAIR #73 PLAN
3/8"=1'-0"

12 SECTION @ STAIR #73 CENTERLINE
3/8"=1'-0"

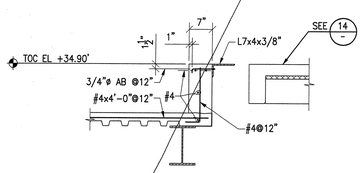

15 SECTION
3/4"=1'-0"

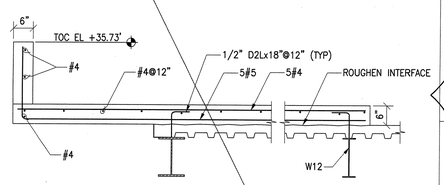

13 SECTION
3/4"=1'-0"

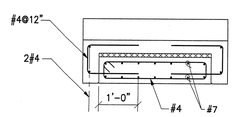

14 SECTION
3/4"=1'-0"

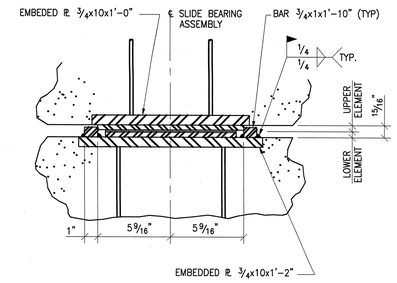

7 SECTION
3"=1'-0"

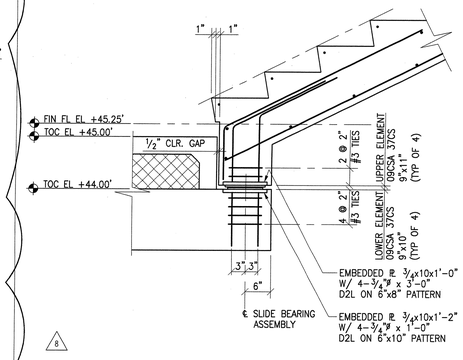

8 SECTION
1"=1'-0"

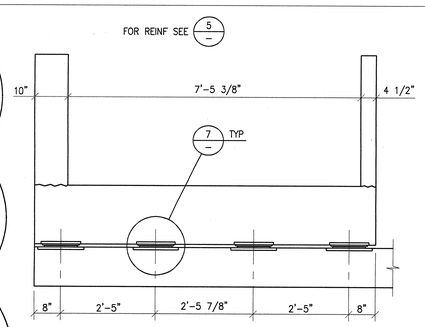

9 SECTION
3/4"=1'-0"

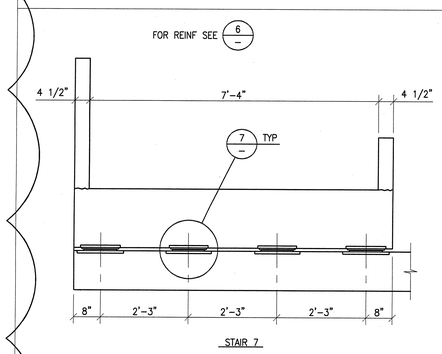

10 SECTION
3/4"=1'-0"

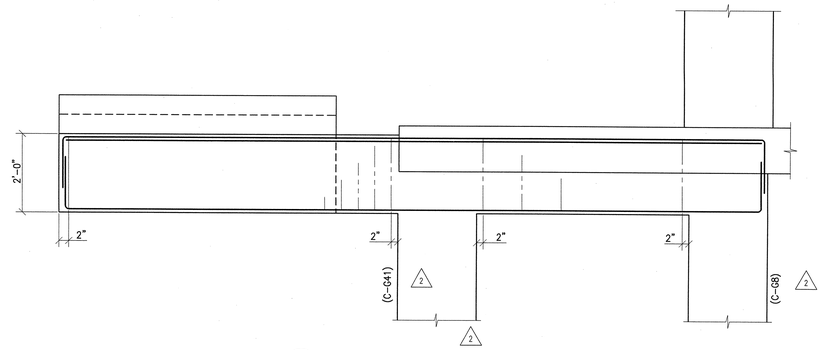

1 SECTION @ B3-162
3/4"=1'-0"

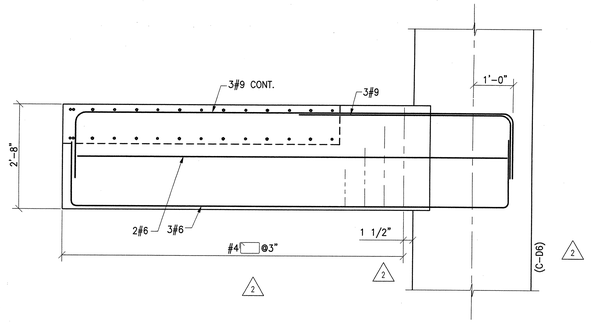

2 SECTION
3/4"=1'-0"

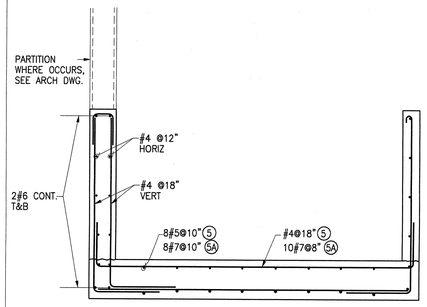

5 5A SECTION
3/4"=1'-0"

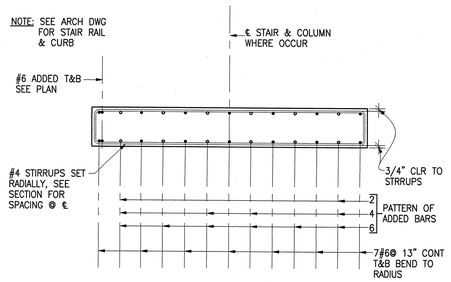

3 SECTION
3/4"=1'-0"

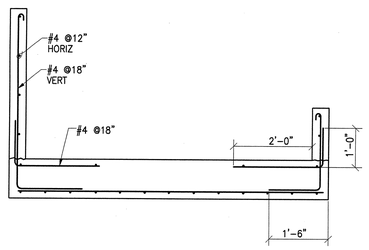

6 SECTION
3/4"=1'-0"

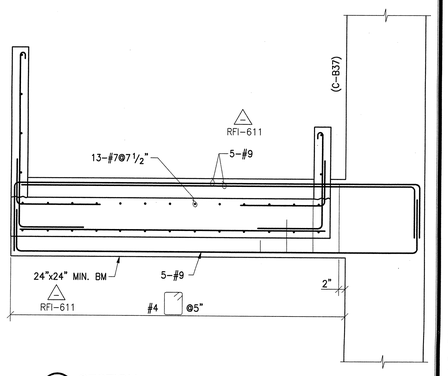

4 SECTION
3/4"=1'-0"

SUPPLEMENTAL INSTRUCTIONS #89
MARCH 13, 2002

FRANK O. GEHRY & ASSOCIATES, INC.
1520-B CLOVERFIELD BOULEVARD, SANTA MONICA, CALIFORNIA 90404 TEL (310)828-6098 FAX (310)828-2098
CANNON DESIGN
TEL (617) 742-5444 FAX (617) 723-8832
Associate Architect
RG VANDERWEIL ENGINEERS, INC.
TEL (310)478-1711 FAX (310)478-1793
TEL (310)473-2665 FAX (310)473-1153
MEP Engineer
JOHN A. MARTIN & ASSOCIATES, INC.
1888 CENTURY PARK EAST LOS ANGELES CA 90067
TEL (310) 843-4600 FAX (310) 843-3284
Structural Engineer

THE RAY AND MARIA STATA CENTER

MASSACHUSETTS INSTITUTE OF TECHNOLOGY
32 VASSAR ST. CAMBRIDGE MASSACHUSETTS 02139

NOTES:

NO	DATE	ISSUE
A	10/25/00	SHELL & CORE (FY1) BID SET-NOT FOR CONSTRUCT
B	01/10/01	SHELL & CORE (FY1) CONSTRUCTION SET
C	04/20/01	SHELL & CORE (FY1-1) CONSTRUCTION/PERMIT SET
1	07/30/01	ADDENDUM #2 (TO ISSUE #B)
2	10/19/01	SUPPLEMENTAL INSTRUCTIONS #A-G
—	12/20/01	SUPPLEMENTAL INSTRUCTIONS #H
—	02/04/02	RFI #31 (TO #H) (TUNED ELIMINATION
—	03/13/02	SUPPLEMENTAL INSTRUCTIONS #89

TITLE
CONCRETE SECTIONS & DETAILS

PROJECT NUMBER
9801
SCALE
3/4"=1'-0"
DRAWN BY

DATE
JULY 30, 2001

SHEET NUMBER
S4-8.7

© FRANK O. GEHRY & ASSOCIATES, INC.