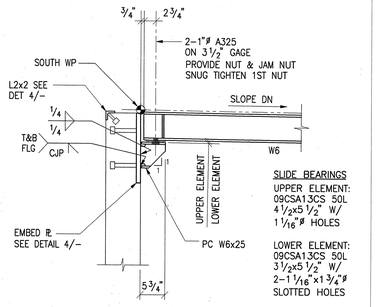


SLIDE BEARINGS
UPPER ELEMENT:
09CSA13CS 50L
4 1/2x5 1/2" W/
1 1/16"ø HOLES

LOWER ELEMENT:
09CSA13CS 50L
3 1/2x5 1/2" W/
2-1 1/16"x1 3/4"ø
SLOTTED HOLES

NOTE:
FOR INFO NOT NOTED
REFER TO DET 18/S4-18

11 DETAIL
1"=1'-0"

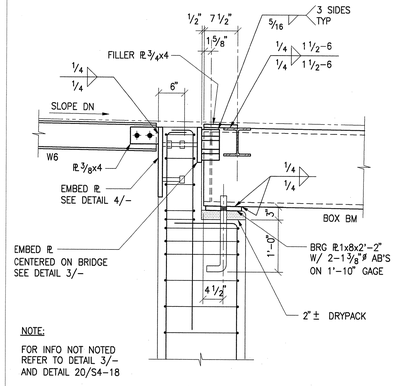


NOTE:
FOR INFO NOT NOTED
REFER TO DETAIL 3/-
AND DETAIL 20/S4-18

7 DETAIL
1"=1'-0"

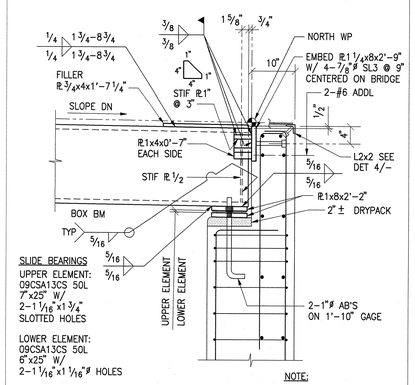


SLIDE BEARINGS
UPPER ELEMENT:
09CSA13CS 50L
7"x25" W/
2-1 1/16"x1 3/4"
SLOTTED HOLES

LOWER ELEMENT:
09CSA13CS 50L
6"x25" W/
2-1 1/16"x1 1/16"ø HOLES

NOTE:
FOR INFO NOT NOTED
REFER TO DET 17/S4-18

3 DETAIL
1"=1'-0"

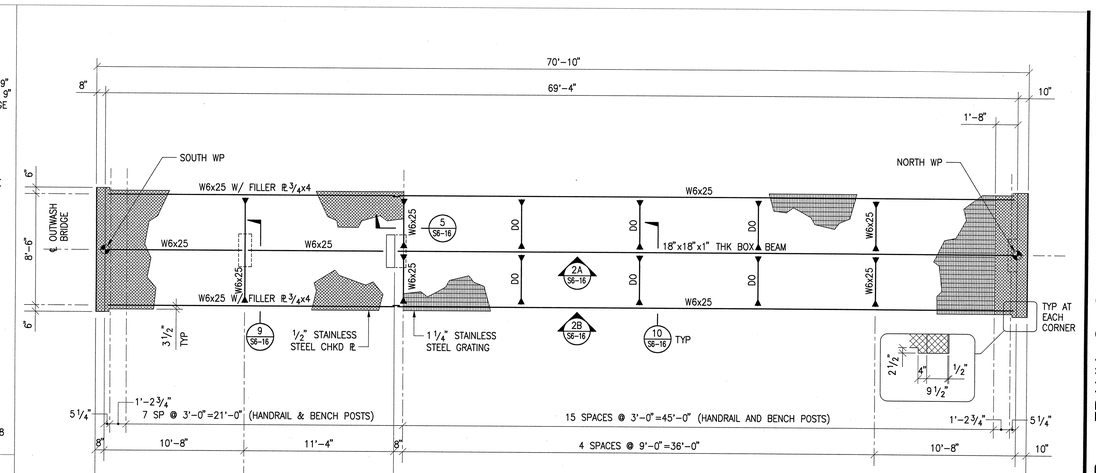
70'-10"
69'-4"
8"
10"
1'-8"
SOUTH WP
NORTH WP
W6x25 W/ FILLER ℞3/4x4
W6x25
OUTWASH
BRIDGE
W6x25
W6x25
W6x25