CONCRETE COLUMN SCHEDULE

COLUMN NUMBER	C-D38 △2	C-D37 △2	C-D36	C-D34	H-G6	C-G49	C-W17	C-W9	C-W8	C-W7	C-W1
"X" COORDINATE											
"Y" COORDINATE											
AXIS ROTATION											
SIZE/TYPE											
REMARKS											
REINFORCING											
FLOOR LEVEL											
TENTH FLOOR (ROOF) EL 139.00'											
NINTH FLOOR EL 126.00'			16.64 / 16.64 / 330.76 / 330.76 / 12#8								
EIGHTH FLOOR EL 113.00'			15.12 / 15.12 / 330.54 / 330.54 / 27"ø / TYPE VII / SLOPED / 12#8	99.87 / 97.26 / 248.43 / 248.22 / 27"ø / TYPE VII / SLOPED / 12#8 DWLS		378.91 / 378.91 / 314.21 / 314.21 / 27"					
SEVENTH FLOOR EL 100.00'			12.99 / 12.99 / 330.24 / 330.24 / SLOPED / 12#8	92.03 / 94.64 / 247.79 / 248.00 / 14"ø / TYPE XI / SLOPED / 6#8		378.91 / 378.91 / 314.21 / 314.21 / 27" / 24"x24" / TYPE I					
SIXTH FLOOR EL 87.00'						379.67 / 378.91 / 314.59 / 314.21 / 27" / 24"x45" / TYPE III / SLOPED OFFSET TRANSFER COL.					
FIFTH FLOOR EL 74.25'	48.28 / 166.87 / 61" / EXTEND 6#8 INTO SHEAR WALL	66.97 / 156.51 / 61" / EXTEND 6#8 INTO SHEAR WALL			273.81 / 214.12 / 61.67"		168.78 / 204.83 / 0"	174.58 / 351.34	154.89 / 366.42	139.92 / 351.83	139.36 / 198.08 / 16.44"
FOURTH FLOOR EL 61.00'	47.55 / 165.56 / 61" / SLOPED	66.24 / 155.19 / 61" / SLOPED			267.25 / 209.00 / 61.67" / △2 12"x12" / TYPE VI / SLOPED	382.04 / 381.26 / 316.60 / 315.40 / 27" / 24"x24" / TYPE I / SLOPED	170.37 / 197.82 / 0"	176.04 / 351.14	154.84 / 367.11	137.29 / 351.17	137.71 / 194.99 / 16.44"
THIRD FLOOR EL 44.00'	46.88 / 164.36 / 61" / 24"x24" / TYPE I / SLOPED / 12#8	CHILDCARE TOC EL +46.65' / 65.58 / 154.00 / 61" / 24"x24" / TYPE I / SLOPED / 12#8				383.61 / 316.60 / 27" / 24"x24" / TYPE I / SLOPED / 19#11 DWLS / 20#8 △6	168.84 / 197.82 / 0" / △6.2 90" / 24"x48" / TYPE III / SLOPED / △1	176.04 / 351.14 / 27"ø / TYPE VII / 12#11	154.81 / 367.11 / 27"ø / TYPE VII / SLOPED / 12#8	136.03 / 350.86 / 27"ø / TYPE VII / SLOPED / 12#8	137.71 / 194.99 / 16.44" / 60"x60" / TYPE IX / SLOPED / 24#11 DWLS / 12#8 △6
SECOND FLOOR EL 27.25'	46.23 / 163.19 / 61" / △3	CHILDCARE TOC EL +33.65' / 64.93 / 152.83 / 61" / TOC 20.90' / △3				TOC EL 17.40'		154.81 / 367.55 / 27"ø / TYPE VII / 12#8	136.01 / 350.86 / 27"ø / TYPE VII / 12#8	137.71 / 194.99 / 16.44" / 24"x24" / TYPE I / △1	
FIRST FLOOR EL 21.57'											
BASEMENT LEVEL EL 5.90' MAX											
BOTT. OF SLAB/BM											
REMARKS	SMRF COL	SMRF COL				SMRF COL	OPEN @ 3rd FLOOR SEE 2/—	SMRF COL ABOVE 2nd FLOOR	SMRF COL ABOVE 2nd FLOOR	SMRF COL ABOVE 2nd FLOOR	OPEN @ 3rd FLOOR SEE 1/—

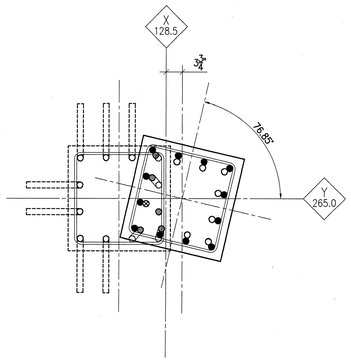

△2 5 C-B37 2nd FLOOR TRANSFER CONFIGURATION
1"=1'-0"

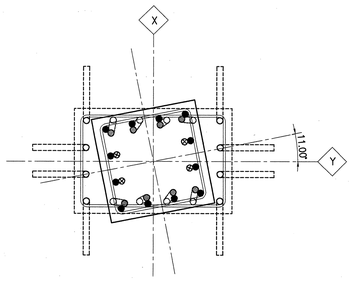

△2 4 C-B50 2nd FLOOR TRANSFER CONFIGURATION
1"=1'-0"

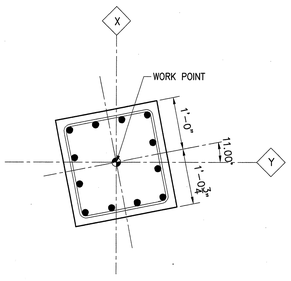

△1 3 C-D19, C-D20 & C-D32 CONFIGURATION BL 4th FLOOR
1"=1'-0"

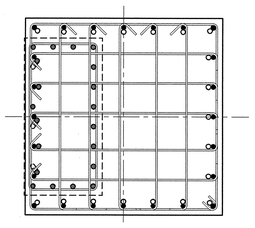

△2 △1 2 C-W17 1st FLOOR TRANSFER CONFIGURATION
3/4"=1'-0"

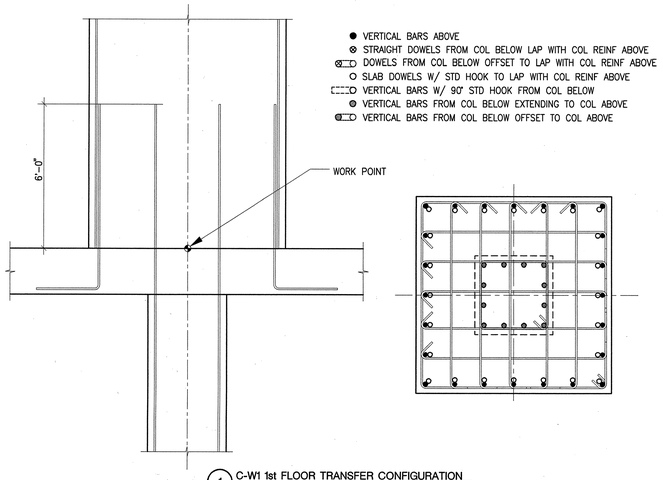

△2 △1 1 C-W1 1st FLOOR TRANSFER CONFIGURATION
3/4"=1'-0"

ADDENDUM #3
(TO ISSUE #8)
AUGUST 27, 2001

THE RAY AND MARIA STATA CENTER

FRANK O. GEHRY & ASSOCIATES, INC.
1520-B CLOVERFIELD BOULEVARD, SANTA MONICA, CALIFORNIA 90404 TEL (310)828-6088 FAX (310)828-2098

CANNON DESIGN
ARCHITECTS & ENGINEERS
TEL (617) 482-3400 FAX (617) 723-8832
PROJECT NUMBER 9801

RG VANDERWEIL ENGINEERS, INC.
CONSULTING ENGINEERS
TEL (617) 423-1423 FAX (617) 423-7594
MEP Engineer

JOHN A. MARTIN & ASSOCIATES, INC.
1000 SOUTH FIGUEROA STREET, LOS ANGELES, CA 90015
TEL (213) 483-3200 FAX (213) 483-3554
Structural Engineer

MASSACHUSETTS INSTITUTE OF TECHNOLOGY
77 MASSACHUSETTS AVENUE
32 VASSAR ST. CAMBRIDGE MASSACHUSETTS 02139

NOTES:

NO	DATE	ISSUE
4	12/04/00	DS. #1-PHASE SIB/ARTS-PHPC-CONSTRUCTION
5	02/09/01	SHELL & CORE (PF12) BID SET-NOT FOR CONSTRUCT
6	02/09/01	SHELL & CORE (PF12) CONSTRUCTION SET
6.2	04/20/01	SHELL & CORE (PF12) CONSTRUCTION SET
6	04/20/01	SHELL & CORE (PF11-1) CONSTRUCTION/PERMIT SET
7	06/04/01	ADDENDUM #1 (TO ISSUE #6)
1	07/02/01	ADDENDUM #2 (TO ISSUE #6)
2	07/26/01	ADDENDUM #3 (TO ISSUE #6)
3	08/27/01	ADDENDUM #3 (TO ISSUE #8)

TITLE
CONCRETE COLUMN SCHEDULE

PROJECT NUMBER 9801
SCALE NONE
DRAWN BY
DATE AUGUST 27, 2001
SHEET NUMBER S7-1.12

© FRANK O. GEHRY & ASSOCIATES, INC.

F:\J8998-M17\I^UE-8-3-08-27-01\EL-SEC-DET\S7-1-12.DWG
hu Aug 23 18:09:41 2001